KOBE®

KOBE Range Hoods

So Quiet... You Won't Believe It's On!

Deluxe®

IN26 SQB-1100-5 SERIES

Built-In

Built-In Hood

Model / Size	IN2636SQB-1100-5 / 36" IN2648SQB-1100-5 / 48"
Appearance	
Stainless Steel	✓
Seamless	✓
Performance	
CFM / Sone	350 to 1100 / 1.6 to 8.0
QuietMode™	1.6 Sone / 46.5db
ECO Mode	10 Minutes on QuietMode™ Every Hour to Promote a Cleaner Kitchen Air Quality
LED Lights	3 Level Lighting 2 x Lights (3W) - 36" 3 x Lights (3W) - 48"
Speed	6 Speed
Control	Electronic Buttons with LED Display
Blower Type	Single Horizontal Squirrel Cage
Exhaust	Top - 8" Round
Consumption / Ampere	290W / 2.5A
Filter	Baffle Filter

Wireless Remote Control
(Sold Separately)

- magnet to attach any magnetic surface
- remote control range up to 16 feet

3D View

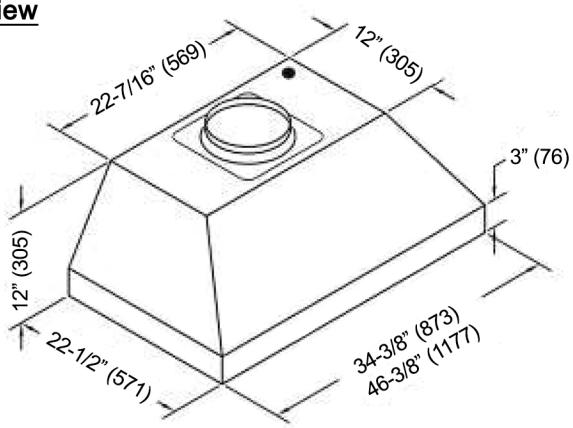

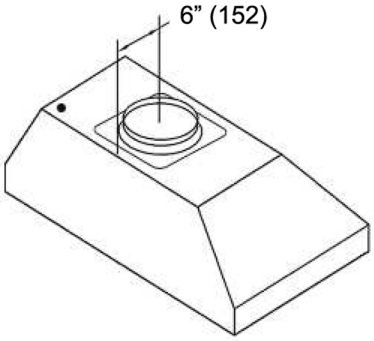

Top View

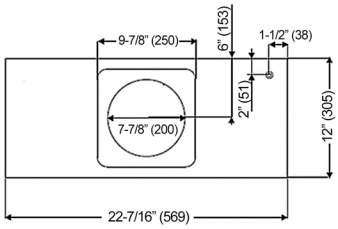

Side View

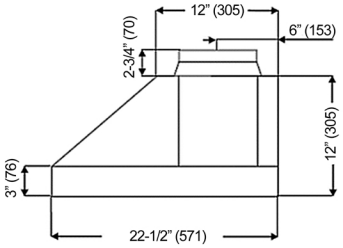

Front View

IN2636SQB-1200-1 (36")

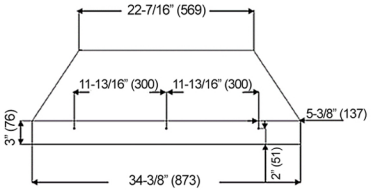

IN2648SQB-1200-1 (48")

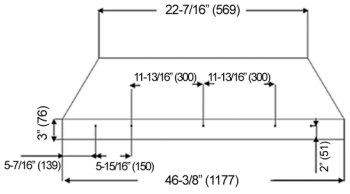

Information subject to change without notice.
Measurement in inches (mm). Inches are converted

** Building code may vary.*