KOBE Range Hoods

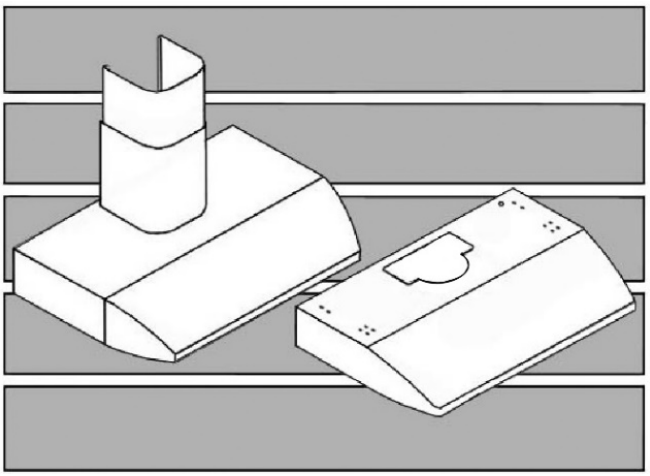

CH22 Series

Model No.

Under Cabinet: CH2230SQB-1 (30”)
CH2236SQB-1 (36”)

Wall Mount: CH2230SQB-WM-1 (30”)
CH2236SQB-WM-1 (36”)

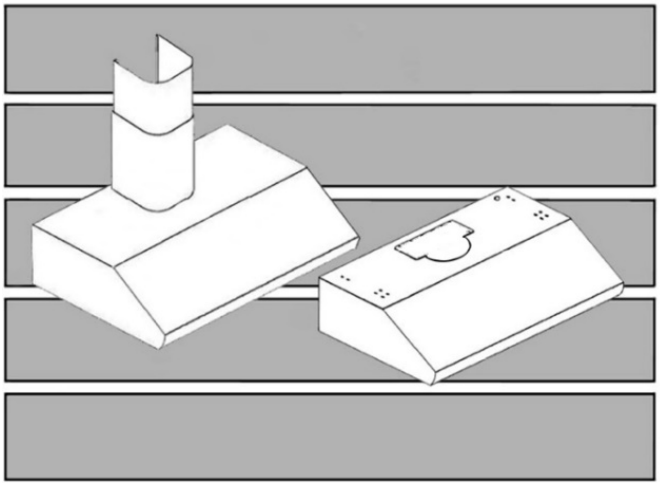

CH27 Series

Model No.

Under Cabinet: CH2730SQB-1 (30”)
CH2736SQB-1 (36”)
CH2742SQB-1 (42”)
CH2748SQB-1 (48”)

Wall Mount: CH2730SQB-WM-1 (30”)
CH2736SQB-WM-1 (36”)
CH2742SQB-WM-1 (42”)
CH2748SQB-WM-1 (48”)

INSTALLATION INSTRUCTIONS
AND OPERATION MANUAL

IMPORTANT
READ THIS FIRST

READ BEFORE INSTALLATION

1. Carefully check all contents of packages.

2. Thoroughly inspect the unit for any shipping damages, cosmetic damages or defects.

3. Have a certified contractor/electrician test the unit before installation.

IF THERE IS ANY PROBLEM:

1. **DO NOT INSTALL THE UNIT AND KEEP ALL ORIGINAL PACKAGING MATERIAL.**

2. Have your original invoice as proof of purchase and product serial number ready.

3. Contact your merchant for product replacement due to shipping damages, cosmetic damages or defects.

4. For all other issues, call 1-877-BUY-KOBE (289-5623), or e-mail to info@koberangehoods.com .

NO RETURN, NO REFUND, NO EXCHANGE IF:

1. **PRODUCT HAS BEEN INSTALLED**
2. **KNOCK-OUT HOLES HAVE BEEN PUNCTURED**
3. **MISSING ORIGINAL PACKAGING MATERIAL AND/OR PARTS**

[ENGLISH]

- READ AND SAVE THESE INSTRUCTIONS -

CONTENTS

IMPORTANT SAFETY INSTRUCTIONS 1
COMPONENTS OF PACKAGE 3
INSTALLATION 5
OPERATING INSTRUCTIONS 14
MAINTENANCE 16
SPECIFICATIONS 17
MEASUREMENTS & DIAGRAMS 19
PARTS LIST 22
CIRCUIT DIAGRAM 28
TROUBLE SHOOTING 30
WARRANTY 31
WARRANTY INFORMATION FORM 33

- READ ALL INSTRUCTIONS CAREFULLY BEFORE STARTING -

ALL WIRING MUST BE DONE BY A PROFESSIONAL AND IN ACCORDANCE WITH NATIONAL AND LOCAL ELECTRICAL CODES

C US
221547

IMPORTANT SAFETY INSTRUCTIONS

- PLEASE READ THIS SECTION CAREFULLY BEFORE INSTALLATION -

⚠WARNING: TO REDUCE THE RISK OF FIRE, ELECTRIC SHOCK OR PERSONAL INJURY, OBSERVE THE FOLLOWING:

1) Installation and electrical wiring must be done by qualified professionals and in accordance with all applicable codes and standards, including fire-rated construction.
2) When cutting or drilling into wall or ceiling, be careful not to damage electrical wiring or other hidden utilities.
3) Ducted fans must be vented to the outside.
   a) Before servicing or cleaning unit, open the light panel and SWITCH POWER OFF AT SERVICE PANEL.
   b) Clean all grease laden surfaces frequently. To reduce the risk of fire and to disperse air properly, make sure to vent air outside. DO NOT vent exhaust air into wall spaces, attics, crawl spaces or garages.

NOTE - This warranty is void without an authorized agent's receipt or if unit is damaged due to misuse, poor installation, improper use, mistreatment, negligence or any other circumstances beyond the control of KOBE RANGE HOODS authorized agents. Any repair carried out without the supervision of KOBE RANGE HOODS authorized agents will automatically void the warranty.

- KOBE RANGE HOODS will not be held responsible for any damages to personal property or real estate or any bodily injuries whether caused directly or indirectly by the range hood.

⚠WARNING: TO REDUCE THE RISK OF PERSONAL INJURY IN THE EVENT OF A RANGE TOP GREASE FIRE:

1. Keep all fan, baffle/spacer/filter/oil tunnel/oil container and grease-laden surfaces clean. Grease should not be allowed to accumulate on fan, baffle/spacer/filter/oil tunnel/oil container.
2. Always turn hood ON when cooking.
3. Use high settings on cooking range ONLY when necessary.
4. Do not leave cooking range unattended when cooking.
5. Always use cookware and utensils appropriate for the type and amount of food prepared.
6. Use this unit only in the manner intended by the manufacturer.
7. Before servicing, switch power off at service panel and lock service panel (if possible) to prevent power from switching on accidentally.
8. Clean ventilating fan frequently.

What to Do In The Event Of a Range Top Grease Fire

- SMOTHER FLAMES with a tight fitting lid, cookie sheet, or metal tray, and then turn off the burner. KEEP FLAMMABLE OR COMBUSTIBLE MATERIAL AWAY FROM FLAMES. If the flames do not go out immediately, EVACUATE THE AREA AND CALL THE FIRE DEPARTMENT or 911.
- NEVER PICK UP A BURNING PAN – You May Get Burned.
- DO NOT USE WATER, including wet dishcloths or towels – a steam blast will result.
- Use an extinguisher ONLY if:
  a) You have a Class A, B, C extinguisher and know how to operate it.
  b) The fire is small and contained in the area where it started.
  c) The fire department has been called.
  d) You can fight the fire with your back to an exit.

What to Do If You Smell Gas

- Extinguish any open flame.
- Do not try to turn on the lights or any type of appliance.
- Open all doors and windows to disperse the gas. If you still smell gas, call the Gas Company and Fire Department right away.

⚠CAUTION

1) For general ventilation use only. Do not use to exhaust hazardous or explosive materials and vapors.
2) To reduce the risk of fire, use only metal ductwork. Sufficient air is needed for proper combustion and exhausting of gases through the flue (chimney) to prevent back drafting.
3) Follow the heating equipment manufacturer's guideline and safety standards such as those published by the National Fire Protection Association (NFPA), and the American Society for Heating, Refrigeration and Air Conditioning Engineers (ASHRAE), and code authorities.
4) Activating any switch on may cause ignition or an explosion.
5) Due to the size and weight of this hood, installation by 2 persons is recommended.

⚠ WARNING

ELECTRICAL SHOCK HAZARD – Can result in serious injury or death. Disconnect appliance from electric power before servicing. If equipped, the fluorescent light bulb contains small amounts of mercury, which must be recycled or disposed of according to Local, State, and Federal Codes.

COMPONENTS OF PACKAGE

(Must keep all material for returns or refunds)

CH22 Series Range Hood Box

{A} KOBE Range Hood
{B} Warranty Registration Card
{C} Quick Reference Guide
{D} 3-1/4” x 10” Exhaust
{E} Top Vent Cover
{F} 6” Round Plastic Collar
{G} Baffle Filters x 2 (30” hood)
x 3 (36” hood)
{H} Stainless Steel Spacer x 2 (30” hood)
{I} Wire Cap x 3
{J} Screws Package (for Under Cabinet only)

{A}

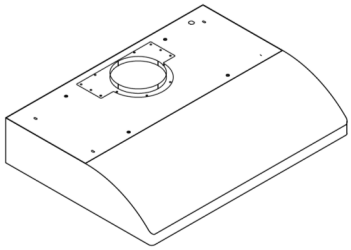

{B}

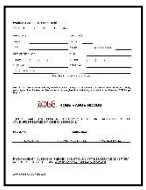

{C}

{D}

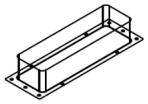

{E}

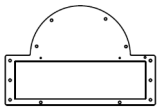

{F}

{G}

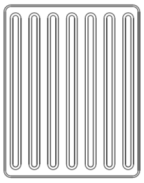

Knob attached to baffle filter

{H}

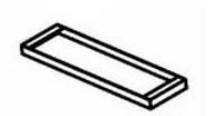

Spacer attached
to hood (30” only)

{I}

Wire caps (3)

{J}

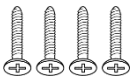

M4 x 3/4" (4)

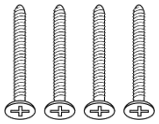

M4 x 1-1/4” (4)

Duct Cover Box (Included in Wall Mount Hood ONLY) CH1120DC-1

{K} Adjustable Duct Cover
{L} Screws Package
{M} Hood-Mounting Bracket
{N} Duct Cover Support x 2
{O} Duct Cover-Mounting Bracket
{P} Screws Package (for Wall Mount only)

{K}

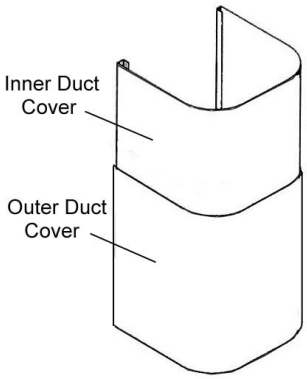

{L}

3/16” x 3/8” (6 PCS)

4 x 6mm (4 PCS)

{M}

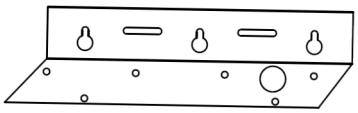

{N}

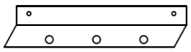

2 PCS

{O}

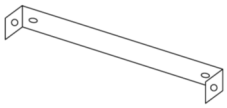

{P}

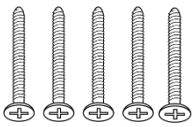

M4 x 1-1/2” (5)

♦ FOR MORE INFORMATION, PLEASE VISIT OUR WEBSITE www.koberangehoods.com OR CONTACT KOBE RANGE HOODS AT (626) 775-8880.

(Must keep all material for returns or refunds)

CH27 SeriesRange Hood Box

{A} KOBE Range Hood
{B} Warranty Registration Card
{C} Quick Reference Guide
{D} 3-1/4” x 10” Exhaust
{E} Top Vent Cover
{F} 6” Round Plastic Collar
{G} Baffle Filters x 2 (30” hood)
x 3 (36”, 42” hood)
x 4 (48” hood)
{H} Stainless Steel Spacer x 2 (30”, 42” hood)
{I} Wire Caps x 3
{J} Screw Package (for Under Cabinet only)

{A}

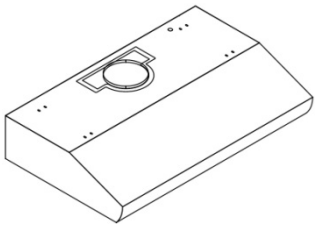

{B}

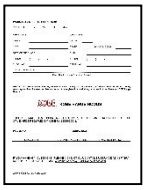

{C}

{D}

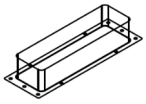

{E}

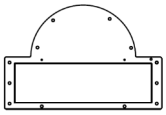

{F}

{G}

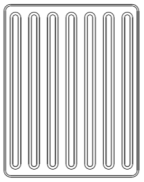

Knob attached to baffle filter

{H}

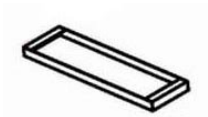

Spacer attached to hood
(30” & 42” only)

{I}

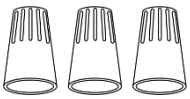

Wire caps (3)

{J}

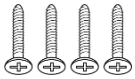

M4 x 3/4" (4 for 30” & 36”)
(8 for 42” & 48”)

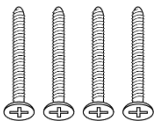

M4 x 1-1/4” (4 for 30” & 36”)
(8 for 42” & 48”)

Duct Cover Box (Included in Wall Mount Hood ONLY) CH1120DC-1

{K} Adjustable Duct Cover
{L} Screws Package
{M} Hood-Mounting Bracket
{N} Duct Cover Support x 2
{O} Duct Cover-Mounting Bracket
{P} Screw Package (for Wall Mount only)

{K}

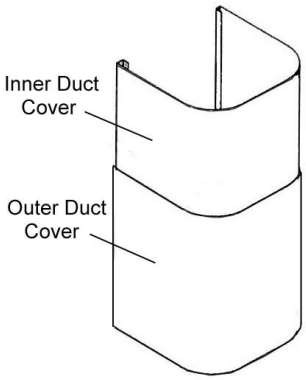

{L}

3/16” x 3/8” (6 PCS)

4 x 6mm (4 PCS)

{M}

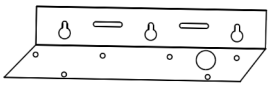

{N}

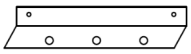

2 PCS

{O}

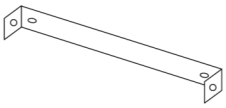

{P}

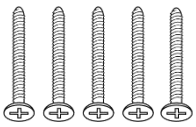

M4 x 1-1/2” (5)

♦ FOR MORE INFORMATION, PLEASE VISIT OUR WEBSITE www.koberangehoods.com OR CONTACT KOBE RANGE HOODS AT (626) 775-8880.

INSTALLATION

PLEASE READ ENTIRE INSTRUCTIONS BEFORE PROCEEDING

Calculation before Installation

To calculate installation, please refer to TABLE 1 and TABLE 2. (All calculation in inches.)

- FOR UNDER THE CABINET -

TABLE 1

A = Height of Floor to Ceiling
B = Height of Floor to Counter Top
(Standard: 36")
C = Preferred Height of Counter Top to Hood Bottom (Minimum 26" to 30")
D = Height of Hood
E = Height of the Cabinet

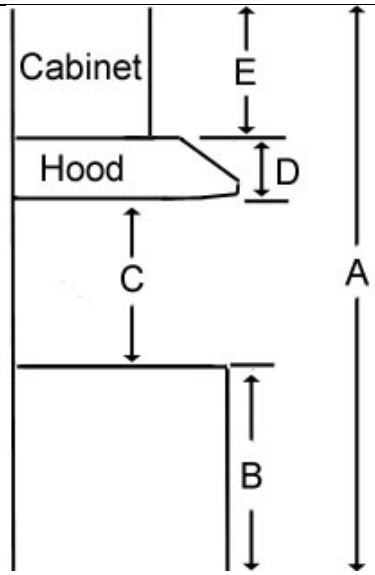

- FOR WALL MOUNT (WITH OPTIONAL DUCT COVER) -

TABLE 2

A = Height of Floor to Ceiling
B = Height of Floor to Counter Top
(Standard: 36")
C = Preferred Height of Counter Top to Hood Bottom (Minimum 26" to 30")
D = Height of Hood
E = Height of Duct Cover [F – D]
F = Height of the Hood Installation
[A – (B+C)]

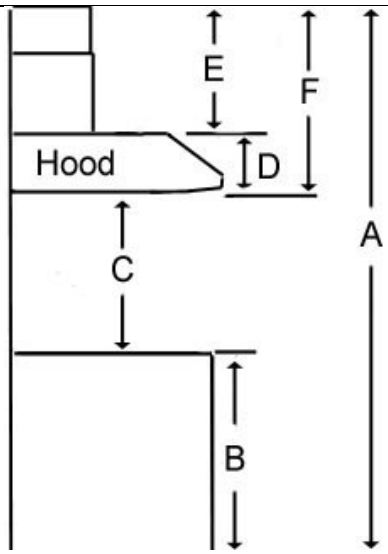

⚠SAFETY WARNING

HOOD MAY HAVE VERY SHARP EDGES; PLEASE WEAR PROTECTIVE GLOVES IF REMOVING ANY PARTS FOR INSTALLING, CLEANING OR SERVICING.

NOTE: BE CAREFUL WHEN USING ELECTRICAL SCREWDRIVER, DAMAGE TO THE HOOD MAY OCCUR.

Installation Contents

UNDER CABINET WALL MOUNT	7 10

UNDER CABINET INSTALLATION

Preparation before Installation

NOTE: TO AVOID DAMAGE TO YOUR HOOD, PREVENT DEBRIS FROM ENTERING THE VENT OPENING.

- Decide the location of the vening pipe from the hood to the outside. (Figure 1)
- A straight, short vent run will allow the hood to perform more efficiently.
- Try to avoid as many transitions, elbows, and long run as possible. This may reduce the performance of the hood.
- Temporarily wire the hood to test for proper operation before installing. If the hood does not operate, check the circuit breaker or house fuse. If the hood is still not working, disconnect power supply and check the continuity of all wire connections.
- Peel protective film off the hood (if any).
- Use duct tape to seal joints between pipe sections.
- For installing under the cabinet with recessed bottom, attach 4-inch wide wood filter strips (not included) on each side (Figure 2)
- Using reference on Page 19-20 to measure and create access opening for electrical wires and exhaust under the cabinet.

Vent option installation

⚠CAUTION: USE HAND TOOLS ONLY. DO NOT OVER TIGHTEN SCREWS. IT MAY CAUSE DAMAGE TO THE HOOD.

1. Choose the require vent option. Some installation screws are already pre-attached to hood.
2. For 6” Round vent installation only:
   - The 6” exhaust is already attached. (Figure 3) Align and secure the 6” Round Plastic Collar {F} to two screws on hood.
3. For Top 3-1/4” x 10” vent installation only:
   - Remove attached 6” exhaust and discard. (Figure 3) Keep 13 screws to install 3-1/4” x 10” exhaust & ven cover.
   - Align and secure Top Vent Cover {E} and 3-1/4” x 10” Exhaust {D} using 14 screws (13 screws taken from 6” exhaust. (Figure 4)
4. For Rear 3-1/4” x 10” vent installation only:
   - Remove attached 6” exhaust and discard.
   - Remove duct knockout from back of the hood and discard. (Figure 5) Unscrew 3-1/4” x 10” Vent Cover from rear exhaust (located inside hood); keep screws to install 3-1/4” x 10” exhaust.

Figure 1

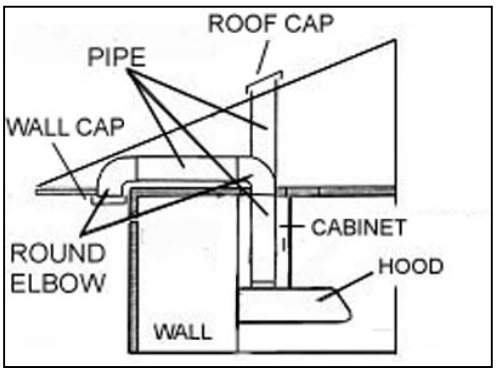

Figure 2

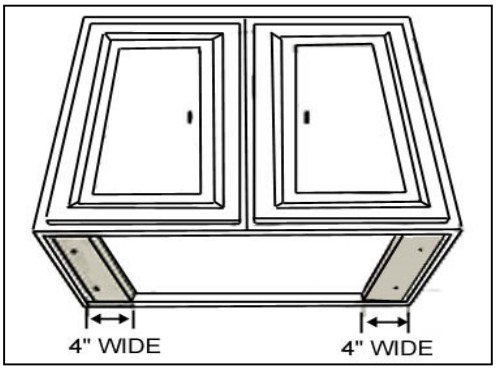

Figure 3

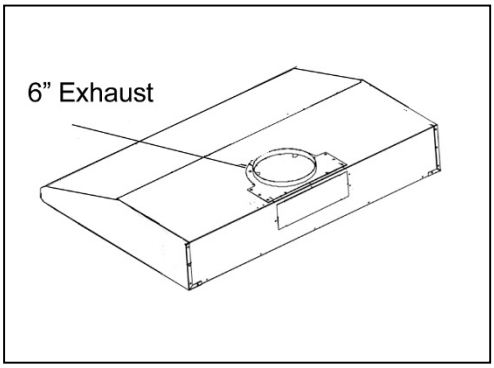

Figure 4

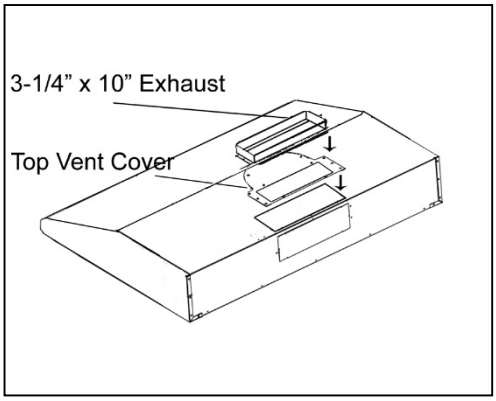

- Align and secure Top Vent Cover {E} and 3-1/4” x 10” Vent Cover (removed from rear exhaust) using 14 screws (13 screws taken from 6” exhaust). (Figure 5)
- Attach the 3-1/4” x 10” Exhaust {D} to rear exhaust (located inside hood) using 10 screws taken from rear vent cover. (Figure 6)

Hood Installation

⚠ CAUTION: If moving the cooking range is necessary to install the hood, turn off the power in an electric range at the main electrical box. SHUT OFF THE GAS BEFORE MOVING A GAS RANGE. And use a protective covering to protect cooktop and/or countertop from damage.

5. Remove the bottom casing or baffle filters / stainless steel spaces if necessary; arrange the electrical wires to run through the 1” diameter hole on the top or the rear of the hood.
6. Using references on Table 1 and measurements on page 19-20, center the hood in place beneath the cabinet and flush with the front of the cabinet.
7. Draw electrical wires through cabinet access opening.
8. Use electrical drill to remove the knockout holes on top of the range hood.
9. Place screws (provided) into the exact center of each knockout hole. Make sure all screws are in place before tightening screws.

   ⚠ CAUTION: MAKE SURE THE HOOD IS SECURE BEFORE RELEASING.

Wiring to Power Supply

⚠ CAUTION: If moving the cooking range is necessary to install the hood, turn off the power in an electric range at the main electrical box. SHUT OFF THE GAS BEFORE MOVING A GAS RANGE. RISK OF ELECTRICAL SHOCK.

⚠ THIS RANGE HOOD MUST BE PROPERLY GROUNDED. MAKE SURE THIS IS DONE BY QUALIFIED ELECTRICIAL IN ACCORDANCE WITH ALL APPLICABLE NATIONAL AND LOCAL ELECTRICAL CODES. BEFORE CONNECTING WIRES, SWITCH POWER OFF AT SERVICE PANEL AND LOCK SERVICE PANEL TO PREVENT POWER FROM BEING SWITCHED ON ACCIDENTALLY.

- If hood is operating normally, connect three wires (black, white and green) to house wires and cap with wire connectors.
- Store wires in the wiring box.

Figure 5

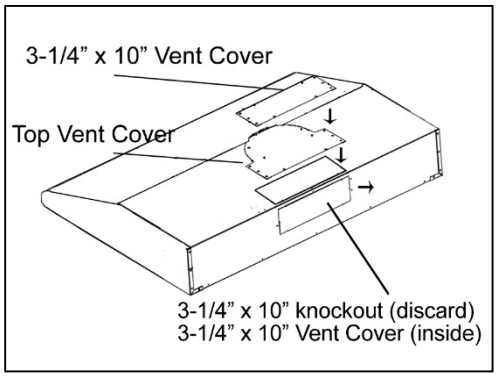

Figure 6

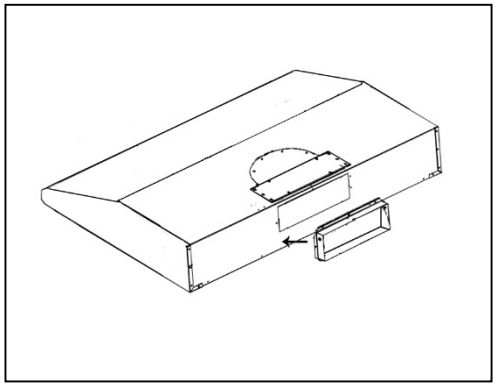

Ductwork Installation

10. Use steel pipe to connect the exhaust on the hood to the ductwork. Use duct tape to make all joints secure and air tight.

Install Accessories

11. Place baffle filters & spacers underneath the hood. (Figure 7)

Final Assembly

12. Turn power ON in control panel. Check all lights and fan operation.
13. Make sure to leave this manual for the homeowner.

Figure 7

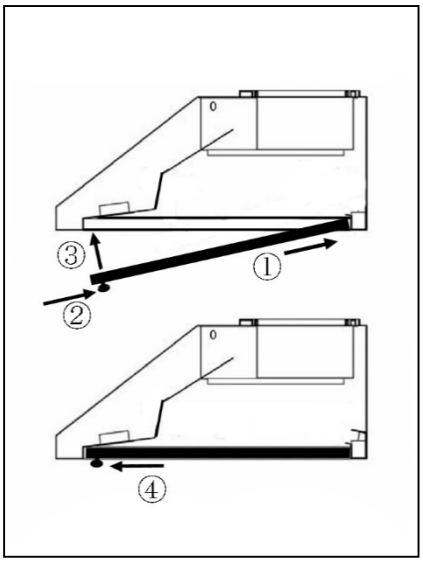

WALL MOUNT INSTALLATION

***This installation required to have Duct Cover Model No. CH1120DC-1.

Preparation before Installation

NOTE: TO AVOID DAMAGE TO YOUR HOOD, PREVENT DEBRIS FROM ENTERING THE VENT OPENING.

- Decide the location of the venting pipe from the hood to the outside. Refer to Figure 8.
- A straight, short venting run will allow the hood to perform more efficiently.
- Try to avoid as many transitions, elbows, and long run as possible. This may reduce the performance of the hood.
- Temporarily wire the hood to test for proper operation before installing. If the hood does not operate, check the circuit breaker or house fuse. If the hood is still not working, disconnect power supply and check the continuity of all wire connections.
- Peel protective film off the hood (if any).
- Use duct tape to seal the joints between pipe sections.
- If necessary, prepare back wall frame with cross framing lumber for secure installation. Using references on Table 2 and meansurements on page 19-21, decide the level of the lumber. Refer to Figure 9.

Vent option installation

⚠ **CAUTION: USE HAND TOOLS ONLY. DO NOT OVER TIGHTEN SCREWS. IT MAY CAUSE DAMAGE TO THE HOOD.**

1. Choose the require vent option. Some installation screws are already pre-attached to hood. Refer to Figure 14. Please use Screws Package {L} with pre-attached screws for wall mount installation.
2. For 6” Round vent installation only:
   - The 6” exhaust is already attached. (Figure 10) Align and secure the 6” Round Plastic collar {F} to two screws on hood. Follow instructions in Step 5 to attach Hood Mounting Bracket {M} and two Duct Cover Support {N} (Figure 14)
3. For Top 3-1/4” x 10” vent installation only:
   - Remove attached 6” exhaust and discard. (Figure 10) Keep 13 screws to install 3-1/4” x 10” exhaust & vent cover.
   - Align Top Vent Cover {E} and 3-1/4” x 10” Exhaust {D}. (Figure 11) Skip to Step 5 to attach Hood Mounting Bracket {M} and two Duct Cover Support {N} using 14 screws (13 screws taken from 6” exhaust. (Figure 14)

Figure 8

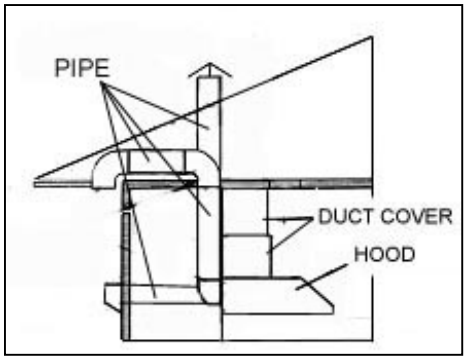

Figure 9

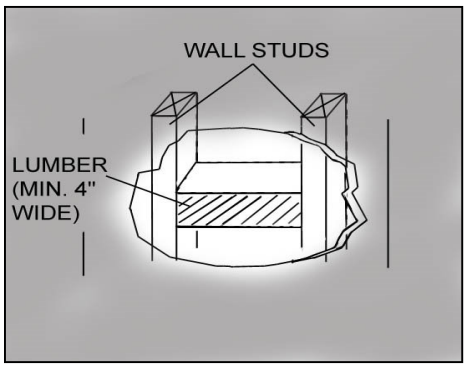

Figure 10

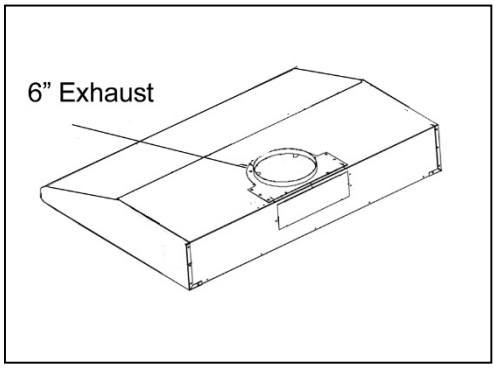

Figure 11

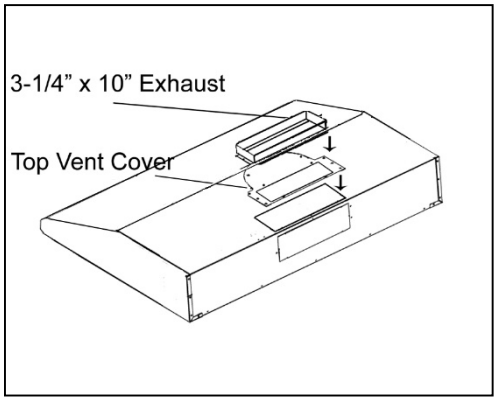

4. For Rear 3-1/4” x 10” vent installation only:
   - Remove attached 6” exhaust and discard. (Figure 10) Keep 13 screws to install vent covers.
   - Remove duct knockout from back of the hood and discard. (Figure 12) Unscrew 3-1/4” x 10” Vent Cover from rear exhaust (located inside hood); keep screws to install 3-1/4” x 10” Exhaust.
   - Align Top Vent Cover {E} and 3-1/4” x 10” Vent Cover (removed from rear exhaust) using 14 screws (13 screws taken from 6” exhaust). (Figure 12) Follow instructions in Step 5 to attach Hood Mounting Bracket {M} and two Duct Cover Support {N} using 14 screws (13 screws taken from 6” exhaust). (Figure 14)
   - Attach the 3-1/4” x 10” Exhaust {D} to rear exhaust (located inside hood) using 10 screws taken from rear vent cover. (Figure 13)

Hood Installation

⚠ CAUTION: If moving the cooking range is necessary to install the hood, turn off the power in an electric range at the main electrical box. SHUT OFF THE GAS BEFORE MOVING A GAS RANGE. And use a protective covering to protect cooktop and/or countertop from damage.

5. Secure Hood-Mounting Bracket {M} and two Duct Cover Support {N} on top of the hood with eight pre-attached screws. Use four 3/16” x 3/8” screws {L} for Hood-Mounting Bracket {M}. (Figure 14)
6. Using references on Table 2 and measurements on page 19-21, mark the leveling point of the hood. Position two moutning screws (provided) on the wall, leaving 1/8” away from the wall as shown in Figure 15.
7. Align Hood-Mounting Bracket {M} to the two screws on the wall and hook hood into place. Tighten screws to secure hood to the wall.

⚠ CAUTION: MAKE SURE HOOD IS SECURE BEFORE RELEASING.

Figure 12

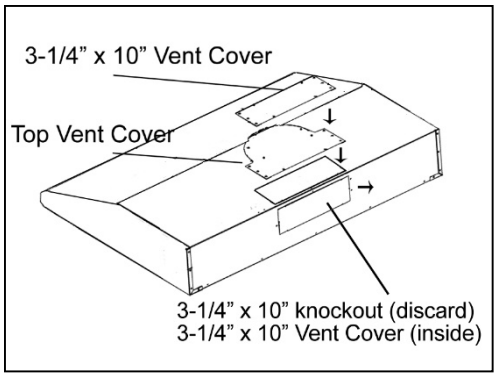

Figure 13

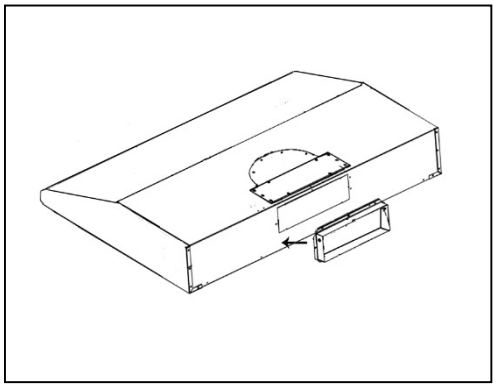

Figure 14

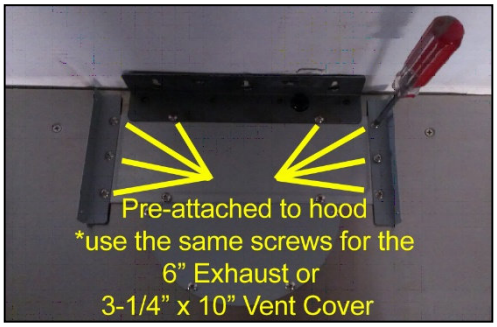

Figure 15

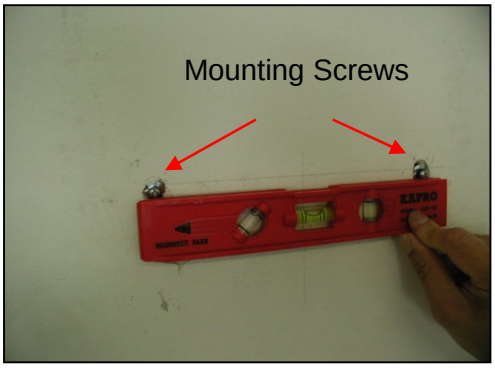

Wiring to Power Supply

⚠ CAUTION: If moving the cooking range is necessary to install the hood, turn off the power in an electric range at the main electrical box. SHUT OFF THE GAS BEFORE MOVING A GAS RANGE. RISK OF ELECTRICAL SHOCK.

⚠ THIS RANGE HOOD MUST BE PROPERLY GROUNDED. MAKE SURE THIS IS DONE BY QUALIFIED ELECTRICIAL IN ACCORDANCE WITH ALL APPLICABLE NATIONAL AND LOCAL ELECTRICAL CODES. BEFORE CONNECTING WIRES, SWITCH POWER OFF AT SERVICE PANEL AND LOCK SERVICE PANEL TO PREVENT POWER FROM BEING SWITCHED ON ACCIDENTALLY.

8. If hood is operating normally, connect three wires (black, white and green) to house wires and cap with wire connectors.
9. Store wires in the wiring box.

Ductwork Installation

10. Use steel pipe to connect the exhaust on the hood to the ductwork. Use duct tape to make all joints secure and air tight.

Duct Cover Installation

11. Mark the position of the Duct Cover-Mounting Bracket {O}. Use reference **E** from Table 2 and measurements on page 19-21. Attach and secure Duct Cover-Mounting Bracket {O} with two screws (provided). (Figure 16) NOTE: Inner duct cover will cover the duct cover-mounting bracket.
12. Position the entire duct cover up onto the hood.
13. Secure the innder duct ccover with two (3/16” x 3/8”) screws {L} to the duct cover-mounting bracket. Shown in Figure 17.
14. Fasten outer duct cover to Duct Cover Support {N} with four (4 x 6 mm) screws {L}.

Figure 16

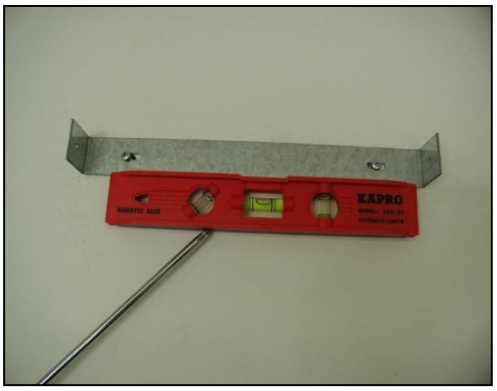

Figure 17

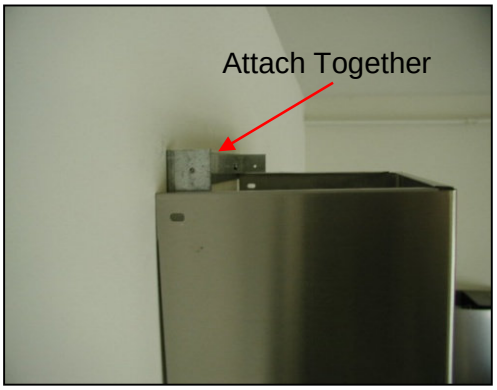

Install Accessories

15. Place baffle filters & spacers underneath the hood. (Figure 18)

Final Assembly

16. Turn power ON in control panel. Check all lights and fan operation.
17. Make sure to leave this manual for the homeowner.

Figure 18

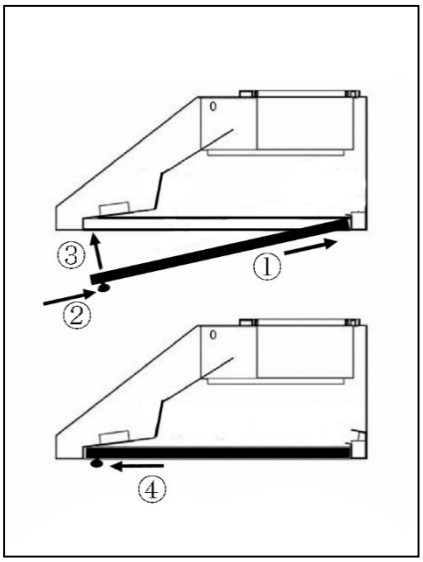

OPERATING INSTRUCTIONS

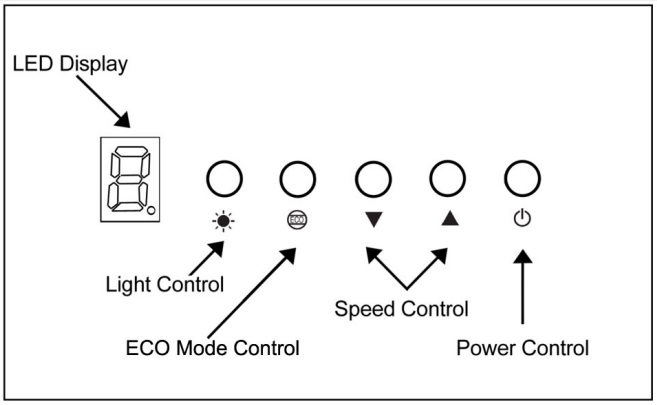

Note: For best results, turn fan on prior to any preparation or cooking and keep fans running while cooking. Adjust speed as needed.

Power Control

Press Power Control to turn On/Off the range hood.

Speed Control

The fan will start on Speed #3. Press ▼ button to decrease the speed level. Press ▲ button to increase the speed level.

To activate 3-minute delay shutoff, press and hold ⏻ button. Once the delay shutoff has been activated the LED Display will flash and fan speed will change to Speed #3. Speed level can be adjusted by pressing ▼ or ▲ button during the 3-minute countdown.

To turn fan off immediately, press ⏻ button a second time.

Light Control

Press ☀ button to turn LED lights ON. Each press of ☀ button will cycle the light intensity through Bright, Medium Bright, Dim, and OFF.

Lights are controlled independently from Power Control and delay shutoff. Turning the power off will not turn lights off.

ECO Mode Control

ECO Mode is set to turn fan on QuietMode™ setting for 10 minutes every hour to remove excess moisture, microscopic particles and odors for better kitchen air quality.

ECO Mode is independent from the Power Control and delay shutoff.

ECO Mode can be activated while fan is running or off. Press and hold ECO button until E icon briefly appears in the LED Display. While fan is running you can change the speed, use delay shutoff or turn off fan without disabling ECO Mode. When fan is off and ECO Mode has been

activated, the icon will appear in the LED Display. The icon will flash while ECO Mode is operating on QuietMode™. To deactivate, press and hold control button until icon no longer appears in the LED Display.

NOTE: Pressing button while ECO Mode is active will activate the regular fan function and the speed will be displayed in LED Display.

Note: Must open door or windows to create sufficient make-up air when ECO Mode has been activated.

MAINTENANCE

For optimal performance, clean the range hood surface and baffles regularly.

To Clean Hood Surface

CAUTION: NEVER USE ABRASIVE CLEANERS, PADS, OR CLOTHS.

*** Regular care will help preserve its fine appearance.

1. Use only mild soap or detergent solutions. Dry surfaces using soft cloth.
2. If hood looks splotchy (stainless steel hood), use a stainless steel cleaner to clean the surface of the hood. Avoid getting cleaning solution onto or into the control panel. Follow directions of the stainless steel cleaner. **Caution: Do not leave on too long as this may cause damage to hood finish**. Use soft towel to wipe off the cleaning solution, gently rub off any stubborn spots. Use dry soft towel to dry the hood.
3. DO NOT allow deposits to accumulate or remain on the hood.
4. DO NOT use ordinary steel wool or steel brushes. Small bits of steel may adhere to the surface and cause rusting.
5. DO NOT allow salt solutions, disinfectants, bleaches, or cleaning compounds to remain in contact with stainless steel for extended periods. Many of these compounds contain chemicals, which may be harmful. Rinse with water after exposure and wipe dry with a clean lint free cloth.

For Baffle Filter models only: to Clean Baffle Filter/Spacers

CAUTION: DRAIN OIL FROM BAFFLE FILTERS, SPACERS & OIL TUNNEL (IF ANY) REGULARLY TO PREVENT OVERFLOW.

1. Remove all the baffle filters, spacers and oil tunnel (if any).
2. Using a sponge, wash with warm soapy water. Dry completely before returning into place.
   CAUTION: SHARP EDGES
   (Note: Baffle Filters are top rack dishwasher safe.)

SPECIFICATIONS

MODEL / SIZE	For Under Cabinet Application	For Wall Mount Application
	CH2230SQB-1 (30”)	CH2230SQB-WM-1 (30”)
	CH2236SQB-1 (36”)	CH2236SQB-WM-1 (36”)
	CH2730SQB-1 (30”)	CH2730SQB-WM-1 (30”)
	CH2736SQB-1 (36”)	CH2736SQB-WM-1 (36”)
	CH2742SQB-1 (42”)	CH2742SQB-WM-1 (42”)
	CH2748SQB-1 (48”)	CH2748SQB-WM-1 (48”)
COLOR	18-Gauge Commercial Grade Stainless Steel	
CONSUMPTION / AMPERE	232W / 2.21A (30” , 36”) 235W / 2.23A (42” , 48”)	
NUMBER OF BLOWER	2	
DESIGN	Seamless / Satin Finish	
BLOWER TYPE	Twin Vertical Turbine Impeller	
EXHAUST	Top: 6" Round 3-1/4" x 10" Rectangular Rear: 3-1/4" x 10" Rectangular	
CONTROLS	Electronic Control (5 Buttons) with LED Display 3-Minute Delay Shutoff ECO Mode	
ECO MODE	ECO Mode runs the range hood on the QuietMode™ setting for 10 minutes every hour to remove excess moisture, microscopic particles and odors to promote a cleaner kitchen environment.	
LIGHTS	3-Level Lighting 3-watt LED light x 2 (30” , 36”) 3-watt LED light x 3 (42” , 48”)	
HOOD DIMENSION (W x D x H)	**CH2230SQB-1 and CH2230SQB-WM-1**	29-3/4” x 22” x 5-7/8”
	CH2236SQB-1 and CH2236SQB-WM-1	29-3/4” x 22” x 5-7/8”
	CH2730SQB-1 and CH2730SQB-WM-1	29-3/4” x 22” x 7”
	CH2736SQB-1 and CH2736SQB-WM-1	35-3/4” x 22” x 7”
	CH2742SQB-1 and CH2742SQB-WM-1	41-3/4” x 22” x 7”
	CH2748SQB-1 and CH2748SQB-WM-1	47-3/4” x 22” x 7”
OPTIONAL ACCESSORIES (W x D x H)	**1) Two-Piece Adjustable Duct Cover (Included in Wall Mount Hood)** CH1120DC-1: 11-13/16" x 10-7/16" x (min 22” ~ max 41") **2) 30" Stainless Steel Back Panel** SSP30: 30" x 1/10" x 32" **3) 36" Stainless Steel Back Panel** SSP36: 36" x 1/10" x 32"	

		Net	Gross
HOOD WEIGHT (lbs)	CH2230SQB-1 (30”)	37.5	45.0
	CH2236SQB-1 (36”)	40.0	53.0

CH2730SQB-1 (30”)	40.5	46.0
CH2736SQB-1 (36”)	44.0	50.5
CH2742SQB-1 (42”)	50.5	61.5
CH2748SQB-1 (48”)	55.0	75.0

SPEED	QuietMode™	1	2	3	4	5
Air Capacity (cfm)	280	350	420	510	610	720
Sone* (dB)	1.0 (40)	1.4 (45)	2.8 (55)	3.5 (58)	4.2 (61)	4.5 (62)

*One sone is equivalent to the sound of a refrigerator at 40 decibels.
**Specifications subject to change without notice.

MEASUREMENTS & DIAGRAMS

***All inch measurements are converted from millimeters. Inch measurements are estimated.
***All measurements in ( ) are millimeters.

-FOR UNDER THE CABINET-

MODEL NO.: CH2230SQB-1 (30”) / CH2236SQB-1 (36”)

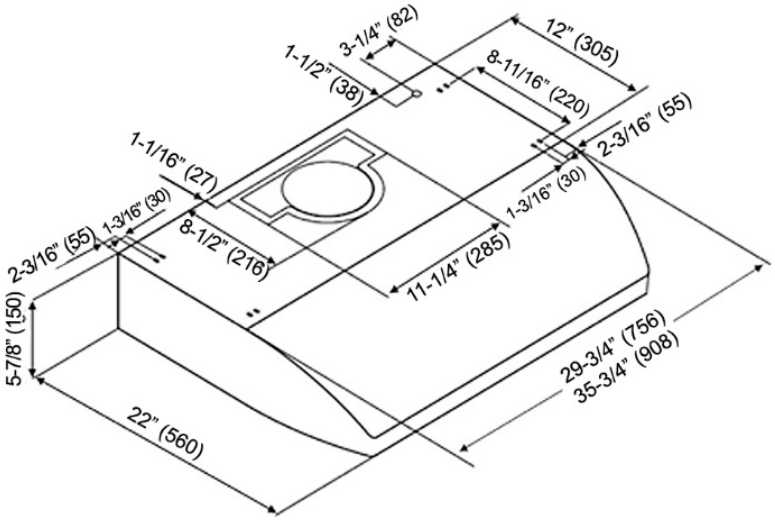

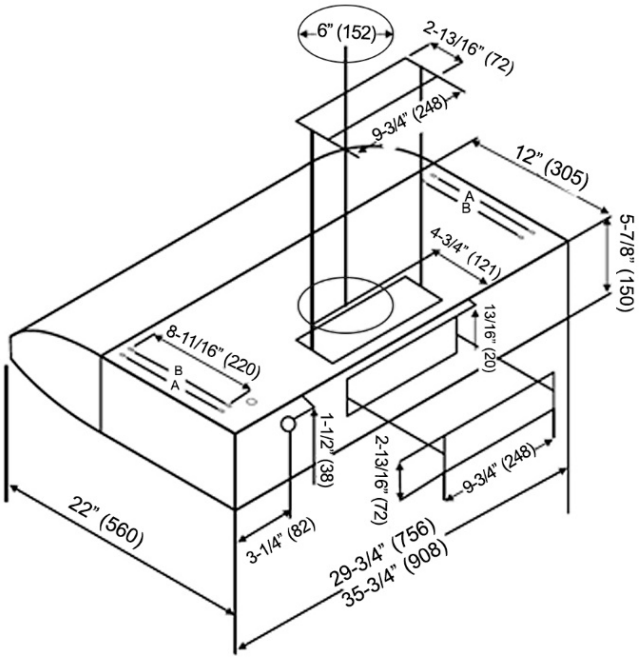

30" = Knockout Holes "A"
36" = Knockout Holes "B"

- FOR WALL MOUNT (DUCT COVER IS INCLUDED) –

MODEL NO.: CH2230SQB-WM-1 (30”) / CH2236SQB-WM-1 (36”)

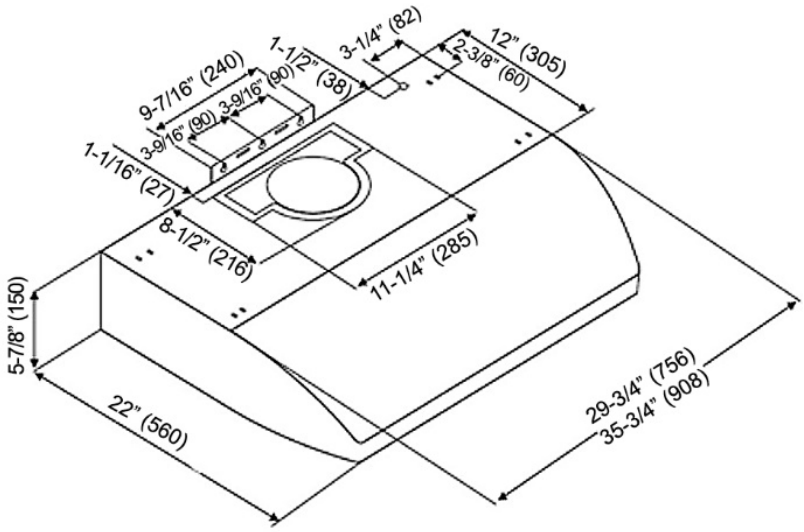

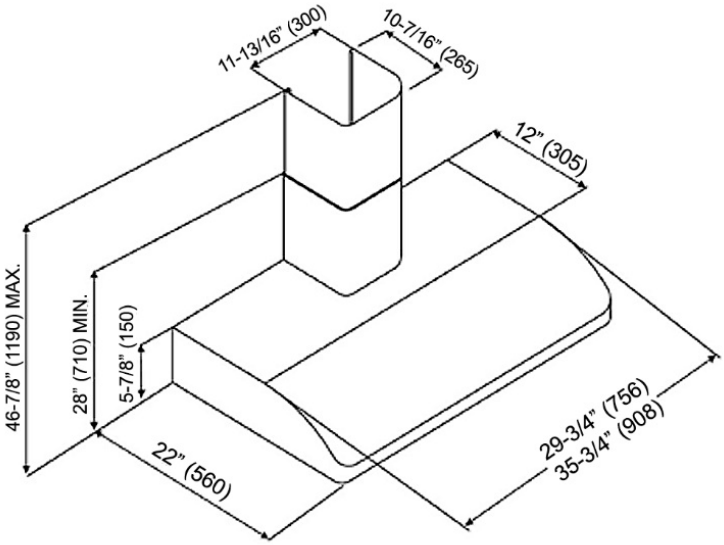

-FOR UNDER THE CABINET-

MODEL NO.: CH2730SQB-1 (30”) / CH2736SQB-1 (36”)
CH2742SQB-1 (42”) / CH2748SQB-1 (48”)

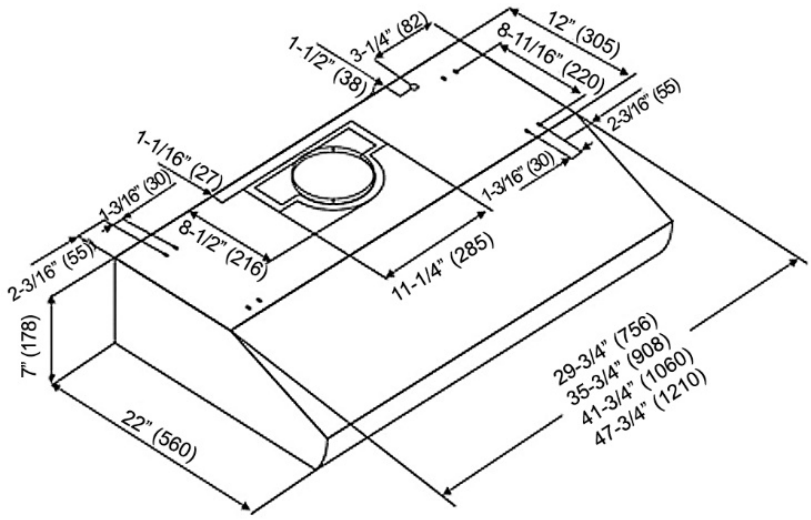

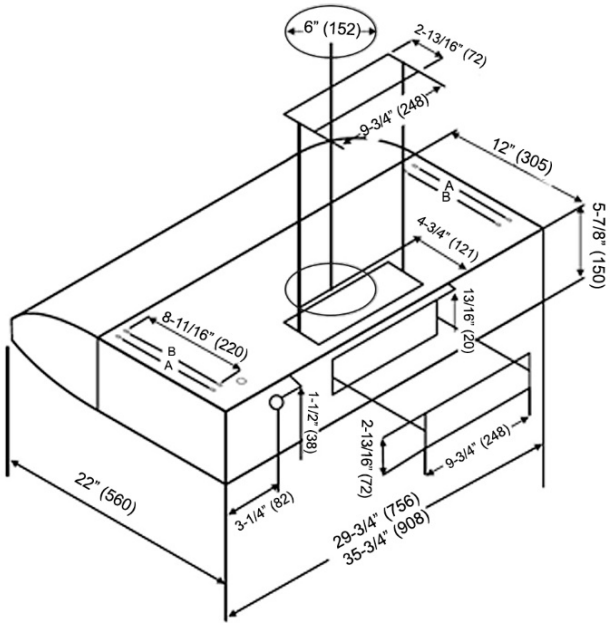

30" = Knockout Holes "A"
36", 42”, 48” = Knockout Holes "A" & "B"

- FOR WALL MOUNT (DUCT COVER IS INCLUDED) –

MODEL NO.: CH2730SQB-WM-1 (30”) / CH2736SQB-WM-1 (36”)
CH2742SQB-WM-1 (42”) / CH2748SQB-WM-1 (48”)

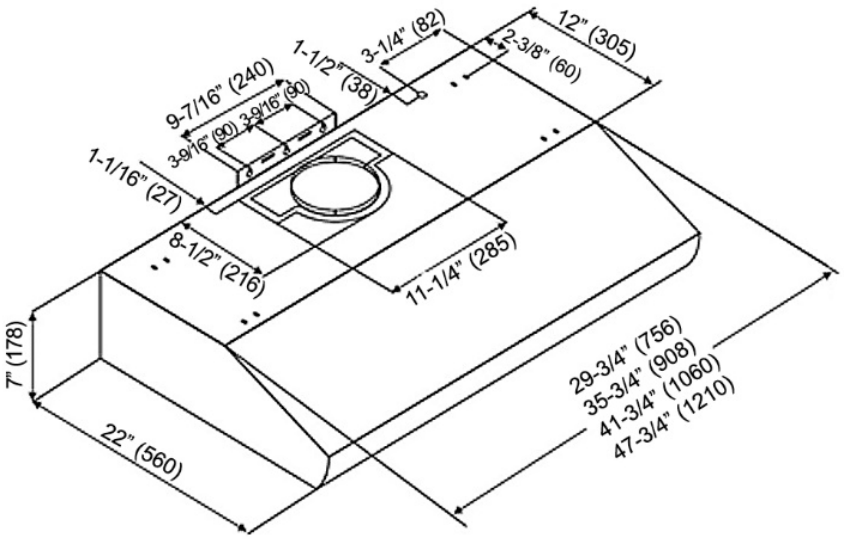

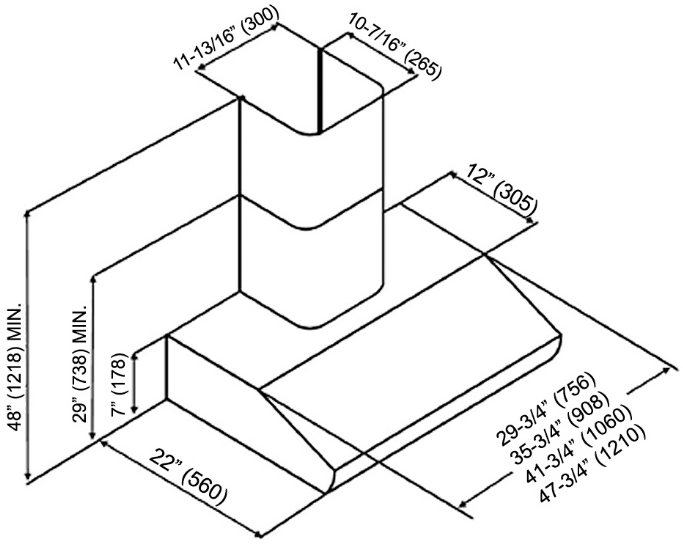

***Hood-Mounting Bracket

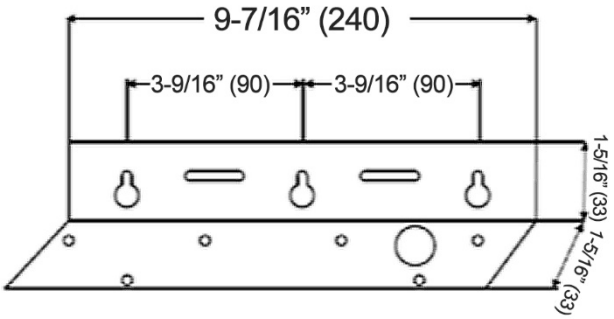

***Duct Cover-Mounting Bracket

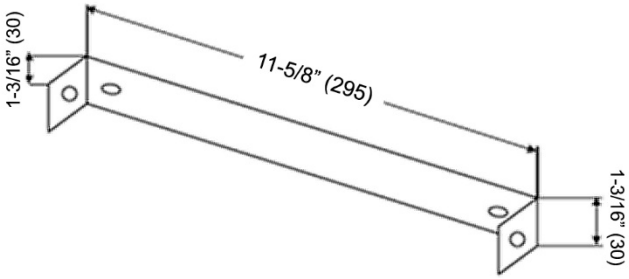

***Duct Cover Support

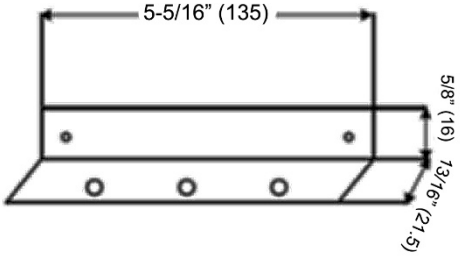

PARTS LIST

MODEL NO.: CH2230SQB-1 and CH2230SQB-WM-1 (30”)
CH2236SQB-1 and CH2236SQB-WM-1 (36”)

NO.	DESCRIPTION	MODEL /SIZE	PART NO.
1	6″ Exhaust Plate		**L1-0241-0001A**
2	Vent Cover (Top)		**L1-0241-0001B**
3	2-3/4″ x9-3/4″ Exhaust Plate		**L1-0241-0002BH**
4	3-3/4″ x11-1/4″ Vent Cover		**L1-0241-0002A**
5	6″ Round Plastic Exhaust		**L1-0505-0003**
6	LED Light (3W)		**L1-0403-0301**
7	Control Panel Support		**L1-0207-1630**
8	Control Unit		**L1-0404-6001-A**
9	Capacitor Support		**L1-0201-1630**
10	Capacitor x 2PCS		**L1-0401-0120-6**
11	Motor (B)		**L1-0301-0120-102B**
12	Motor (A)		**L1-0301-0120-102A**
13	Turbine Impeller (B)		**L1-0251-0747-B**
14	Turbine Impeller (A)		**L1-0251-0747-A**
15	Processor Board		**L1-0404-6001-B**
16	Plastic Oil Tunnel		**L1-0502-0102**
17	Safety Screen		**L1-0602-0101**
18	Safety Screen Screws		**L1-0705-0001**
19	Stainless Steel Spacer{2-13/16”(71)x14-3/4”(375)}	CH2230SQB-1	**B101-2230-15**
20	Baffle Filter		**L1-0214-0122**

Duct Cover (Included in CH22 SQB-1 Series Only)

NO.	DESCRIPTION	MODEL /SIZE	PART NO.
01	Hood Mounting Bracket		**L1-0221-1630**
02	Screws (3/16″x3/8″)		**L1-0707-0002**
03	Duct Cover Support		**L1-0208-1630**
04	Duct Cover	CH1120DC-1	**12-16300-61**
05	Duct Cover- Mounting Bracket		**L1-0203-0390**
06	Screws (TS 4 x 6mm)		**L1-0708-0002**

MODEL NO.: CH2230SQB-1 and CH2230SQB-WM-1 (30”)
CH2236SQB-1 and CH2236SQB-WM-1 (36”)

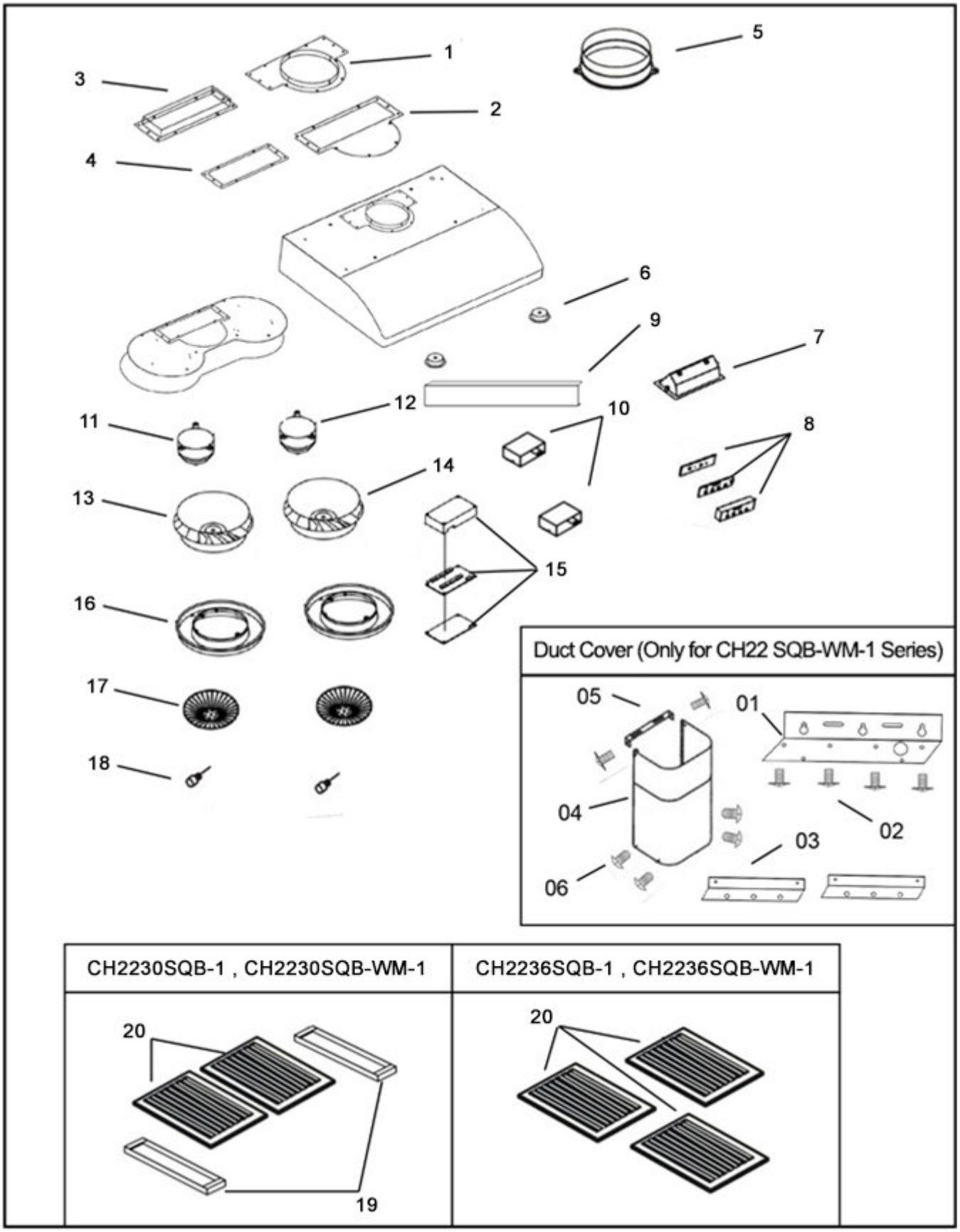

MODEL NO.: CH2730SQB-1 and CH2730SQB-WM-1 (30”)
CH2736SQB-1 and CH2736SQB-WM-1 (36”)

NO.	DESCRIPTION	MODEL /SIZE	PART NO.
1	6″ Exhaust Plate		L1-0241-0001A
2	Vent Cover (Top)		L1-0241-0001B
3	2-3/4″ x9-3/4″ Exhaust Plate		L1-0241-0002BH
4	3-3/4″ x11-1/4″ Vent Cover		L1-0241-0002A
5	6″ Round Plastic Exhaust		L1-0505-0003
6	LED Light (3W)		L1-0403-0301
7	LED Light Support	CH2730SQB-1	B101-02730-06
		CH2736SQB-1	B101-02736-06
8	Control Unit		L1-0404-6001-A
9	Capacitor Support		L1-0201-1630
10	Capacitor x 2PCS		L1-0401-0120-6
11	Motor (B)		L1-0301-0120-102B
12	Motor (A)		L1-0301-0120-102A
13	Turbine Impeller (B)		L1-0251-0747-B
14	Turbine Impeller (A)		L1-0251-0747-A
15	Processor Board		L1-0404-6001-B
16	Plastic Oil Tunnel		L1-0502-0102
17	Safety Screen		L1-0602-0101
18	Safety Screen Screws		L1-0705-0001
19	Stainless Steel Spacer{2-13/16”(71)x14-3/4”(375)}	CH2730SQB-1	B101-2230-15
20	Baffle Filter		L1-0214-0122

Duct Cover (Included in CH27 SQB-WM-1 Series Only)

NO.	DESCRIPTION	MODEL /SIZE	PART NO.
01	Hood Mounting Bracket		L1-0221-1630
02	Screws (3/16″x3/8″)		L1-0707-0002
03	Duct Cover Support		L1-0208-1630
04	Duct Cover	CH1120DC-1	12-16300-61
05	Duct Cover- Mounting Bracket		L1-0203-0390
06	Screws (TS 4 x 6mm)		L1-0708-0002

MODEL NO.: CH2730SQB-1 and CH2730SQB-WM-1 (30”)
CH2736SQB-1 and CH2736SQB-WM-1 (36”)

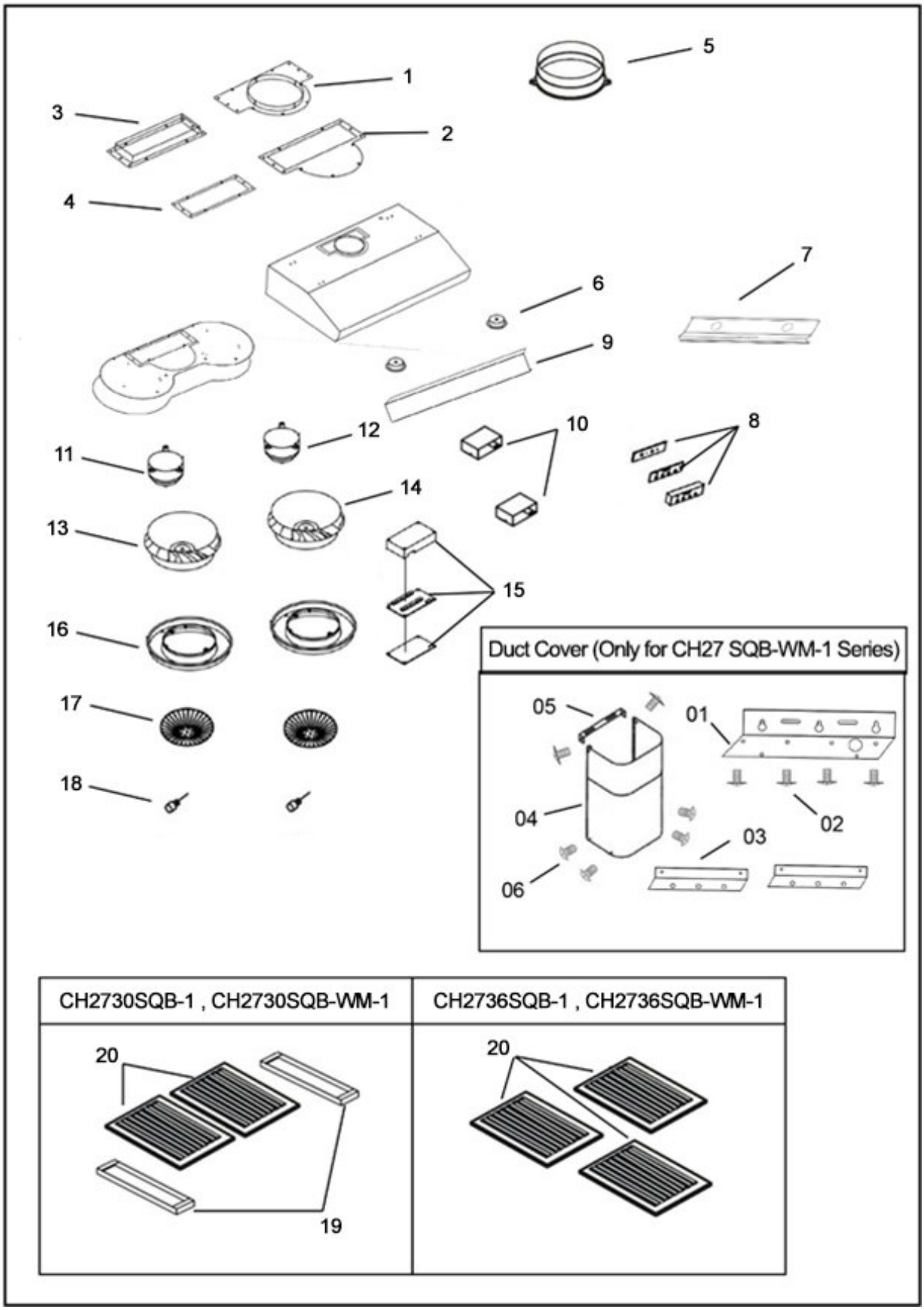

MODEL NO.: CH2742SQB-1 and CH2742SQB-WM-1 (42”)
CH2748SQB-1 and CH2748SQB-WM-1 (48”)

NO.	DESCRIPTION	MODEL /SIZE	PART NO.
1	6″ Exhaust Plate		**L1-0241-0001A**
2	Vent Cover (Top)		**L1-0241-0001B**
3	2-3/4″ x9-3/4″ Exhaust Plate		**L1-0241-0002BH**
4	3-3/4″ x11-1/4″ Vent Cover		**L1-0241-0002A**
5	6″ Round Plastic Exhaust		**L1-0505-0003**
6	LED Light (3W)		**L1-0403-0301**
7	LED Light Support	CH2742SQB-1	**B101-02742-06**
		CH2748SQB-1	**B101-02748-06**
8	Control Unit		**L1-0404-6001-A**
9	Capacitor Support		**L1-0201-1630**
10	Capacitor x 2PCS		**L1-0401-0120-6**
11	Motor (B)		**L1-0301-0120-102B**
12	Motor (A)		**L1-0301-0120-102A**
13	Turbine Impeller (B)		**L1-0251-0747-B**
14	Turbine Impeller (A)		**L1-0251-0747-A**
15	Processor Board		**L1-0404-6001-B**
16	Plastic Oil Tunnel		**L1-0502-0102**
17	Safety Screen		**L1-0602-0101**
18	Safety Screen Screws		**L1-0705-0001**
19	Stainless Steel Spacer {3-3/16”(80)x14-3/4”(375)}	CH2742SQB-1	**B101-2742-15**
20	Baffle Filter		**L1-0214-0122**

Duct Cover (Included in CH27 SQB-WM-1 Series Only)

NO.	DESCRIPTION	MODEL /SIZE	PART NO.
01	Hood Mounting Bracket		**L1-0221-1630**
02	Screws (3/16″x3/8″)		**L1-0707-0002**
03	Duct Cover Support		**L1-0208-1630**
04	Duct Cover	CH1120DC-1	**12-16300-61**
05	Duct Cover- Mounting Bracket		**L1-0203-0390**
06	Screws (TS 4 x 6mm)		**L1-0708-0002**

MODEL NO.: CH2742SQB-1 and CH2742SQB-WM-1 (42”)
CH2748SQB-1 and CH2748SQB-WM-1 (48”)

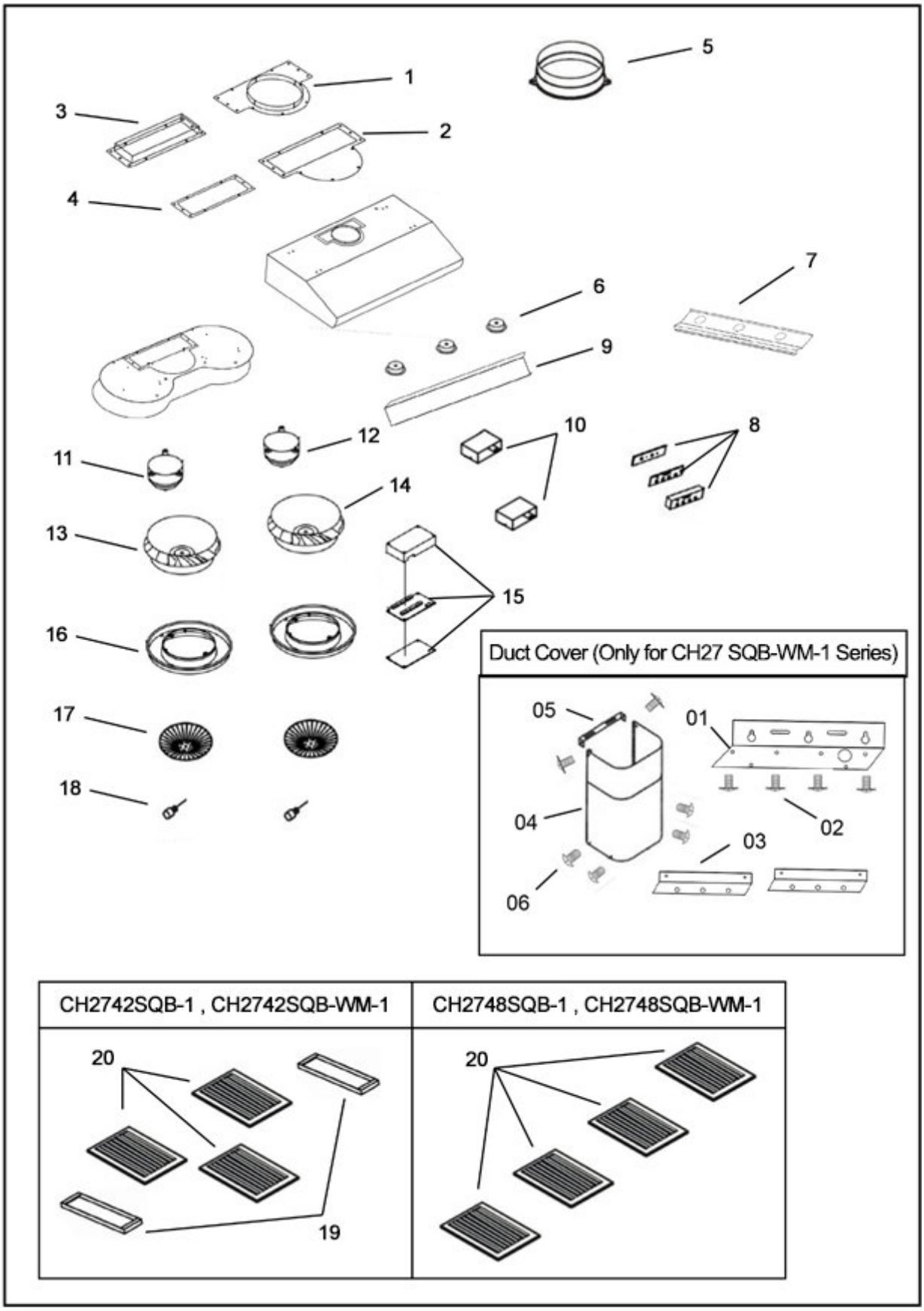

CIRCUIT DIAGRAM

MODEL NO.: **CH2230SQB-1 and CH2230SQB-WM-1 (30”)**
CH2236SQB-1 and CH2236SQB-WM-1 (36”)
CH2730SQB-1 and CH2730SQB-WM-1 (30”)
CH2736SQB-1 and CH2736SQB-WM-1 (36”)

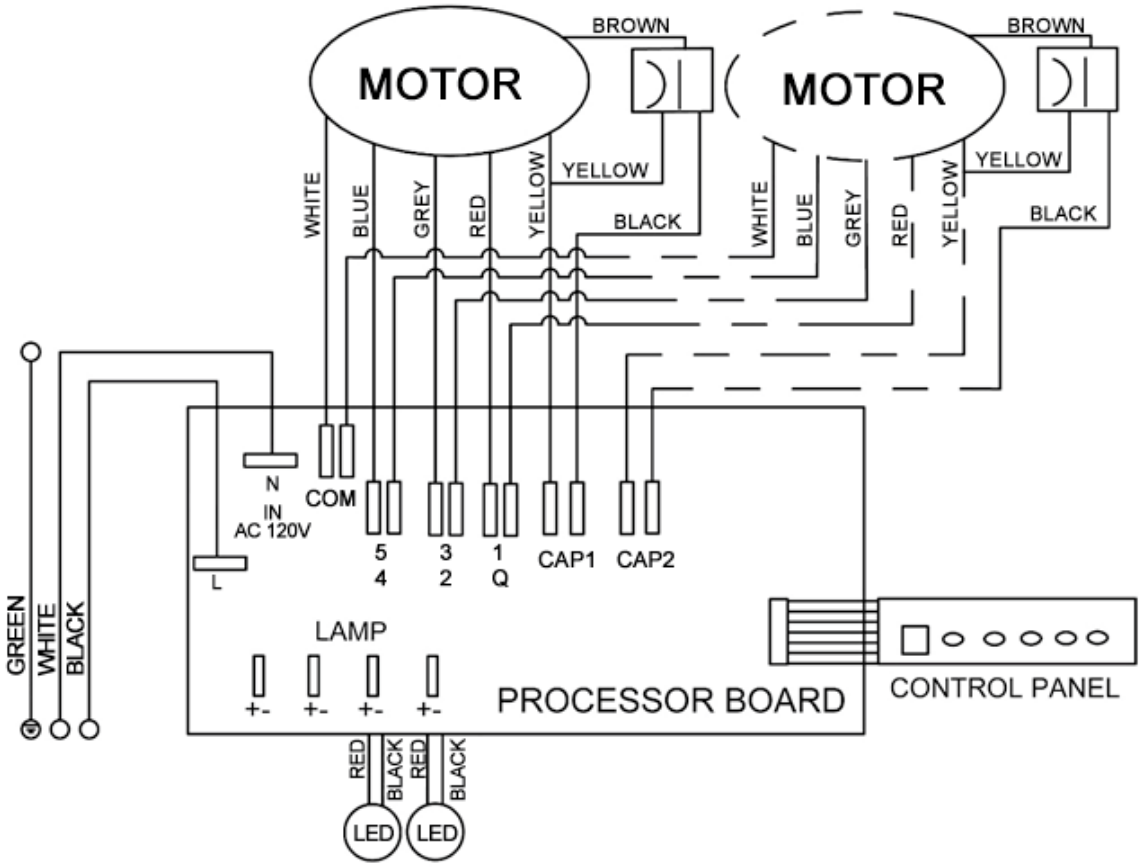

MODEL NO.: CH2742SQB-1 and CH2742SQB-WM-1 (42”)
CH2748SQB-1 and CH2748SQB-WM-1 (48”)

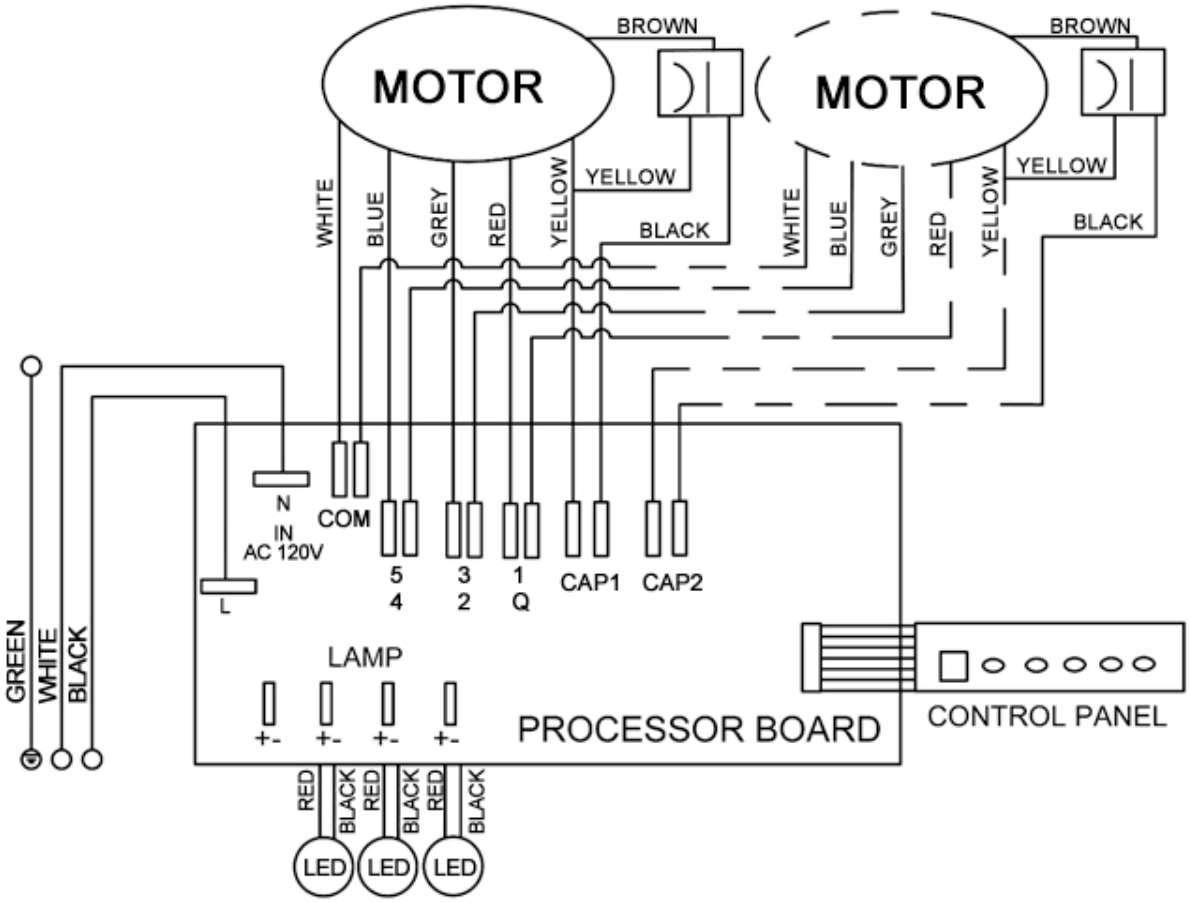

TROUBLE SHOOTING

Issue	Possible Cause	Solution
After Installation, both motors and lights are not working.	The power is not on.	Make sure the circuit breaker and the unit's power is ON. Use a voltage meter to check the power supply.
	The wire connection is not secure.	Check and tighten wire connection.
	The control panel and processor board wiring are disconnected.	Check wire continuity from control panel to processor board.
	The control panel and processor board is defective.	Replace the control panel or processor board.
Lights are working, but motor(s) is not.	The motor(s) is defective.	Replace the motor.
	The capacitor(s) is defective.	Replace capacitor(s).
	The control panel or processor board is defective.	Replace the control panel or processing board.
The range hood is vibrating.	The blower system is not secure.	Tighten the turbine impeller/squirrel cage and air chamber.
	The turbine impeller/squirrel cage is not balanced.	Replace the turbine impeller/squirrel cage.
	Hood is not secured in place.	Check the installation of hood, tighten the mounting bracket.
The motor is working, but the lights are not working.	LED light fixture(s) is defective.	Replace LED light fixture(s)
	The light wiring(s) is loose.	Check wire continuity from processor board to light transformer to LED light fixture(s).
	The control panel or processor board is defective.	Replace the control panel or processing board.
The range hood is not venting out correctly.	The range hood is installed outside of the manufacture recommended clearance.	Adjust the clearance between the range hoods and cook top to 26" to 30". For Island range hood, the clearance between the range hoods and cook top is 30" to 36".
	There is no make-up air inside the house.	Open the window to enhance the performance of the range hood by creating a sufficient make-up air.
	Obstacle blocking the pipe work.	Remove all obstacles from the duct work.
	The pipe size is smaller than the suggested pipe size.	Change the ducting according to the manufacture suggestion.
Cold air is coming into the home.	The pipe connection is not properly sealed.	Check the pipe installation.
	The damper is not properly installed or is missing from the installation.	Check the damper installation.
	The damper is not installed.	Installing the damper will help eliminate air backflow.

WARRANTY CERTIFICATE

KOBE Range Hoods (referred to herein as “we”or “us”) warrants to the original purchaser (referred to herein as “you” or “your”) all products manufactured or supplied by us to be free from defect in workmanship and materials as follows:

TWO-YEAR LIMITED WARRANTY FOR PARTS AND LABOR ON KOBE PREMIUM SERIES: For two years from the date of your original invoice from a KOBE authorized dealer, we will, at our sole discretion, choose to repair or replace the product free of charge that failed due to manufacturing defects.

It is your sole responsibility to ensure the product is readily accessible for the service technician to perform repairs. **The service technician will not, under any circumstance, remove, alter or modify any fixture built around and/or connected to the product to gain access to perform repairs.**

During the two-year Limited Warranty period, additional charges may apply which include but are not limited to:

- Service technician travel charges if the requested service location is 30-miles out of KOBE’s authorized service area
- Parts shipping expenses
- Un-installation of defective product and Installation of replacement product

Warranty Exclusions:

This warranty does not cover, including but not limited to the following:

a. Improper installation.
b. Any repair, alteration, modification not authorized by KOBE.
c. Duct alteration, modification and connection.
d. Incorrect electric current, voltage or wiring.
e. Normal maintenance and service required for the product.
f. Consumable parts such as light bulbs and carbon filters.
g. Improper usage of the product that it is not intended for, such as commercial use, outdoor use and multi-family use.
h. Normal wear and tear.
i. Chips, scratches or dents by abuse or misuse of the product.
j. Damages caused by accident, fire, flood and other Acts of God.
k. Expenses incurred for service located outside of the designated service area.
l. Purchases from unauthorized dealers.
m. Removal fees of defective product and Installation fees associated with replacement product.
n. Scratches inside the hood, back of the baffle filter, and inside the duct cover are not covered by the warranty.

If we determine that the warranty exclusions listed above apply or if you fail to provide all necessary documentation for warranty service, you will be responsible for all expenses associated with the requested service, including parts, labor, shipping, travelling and any other expense related to the service request.

To qualify for warranty service, you must:

1. Have the **ORIGINAL** proof of purchase
2. Be the **ORIGINAL** purchaser of the product
3. Have the model number
4. Have the serial number
5. Have a description of the nature of any defect in the product or part

TO REQUEST WARRANTY SERVICE, PLEASE CONTACT THE KOBE RANGE HOODS SERVICE CENTER:

KOBE SERVICE CENTER
Tel: 1-877-BUY-KOBE (289-5623)
E-mail: customer.service@koberangehoods.com

For service in Canada and
To report a problem, please contact:
Tel: 1-626-775-8880
Email: customer.service@koberangehoods.com

WARRANTY INFORMATION FORM

Fill in the blanks and keep this paper with the **original invoice** in a safe place for future service purpose.

1. Date of purchase : _____
2. Model No. : _____
3. Serial No. : _____

For warranty service or spare parts purchase contact:
KOBE Service Center
Toll Free: 1-877-BUY-KOBE (289-5623)
Email: customer.service@koberangehoods.com

For service in Canada and to report a problem, please contact:
Tel: 1-626-775-8880
Email: customer.service@koberangehoods.com

Your notes:

KOBE Range Hoods
11775 Clark Street
Arcadia, CA 91006 USA

www.koberangehoods.com

This KOBE hood is made for use in the USA and CANADA only. We do not recommend using this hood overseas as the power supply may not be compatible and may violate the electrical code of that country. **Using a KOBE hood overseas is at your own risk and will void your warranty.**

Cette hotte KOBE est fabriquée pour usage aux États-Unis et au Canada seulement. Il n'est pas recommandé d'utiliser cette hotte à l'étranger puisque l'alimentation électrique pourrait ne pas être compatible et enfreindre le code de l'électricité de ce pays. **L'usage de la hotte KOBE à l'étranger est à votre propre risque et la garantie sera annulée.**

Esta campana de extracción KOBE ha sido fabricada para ser utilizada únicamente en EE.UU. y CANADÁ. No recomendamos la utilización de esta campana en el extranjero debido a que la fuente de energía podría no ser compatible y podría violar el código eléctrico de dicho país. **Utilizar una campana KOBE en el extranjero será a su propio riesgo y anulará la garantía.**

VER.170101

Information subject to change without notice.